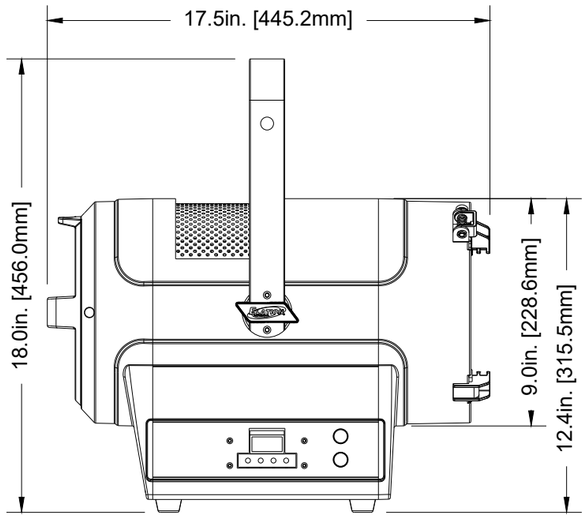

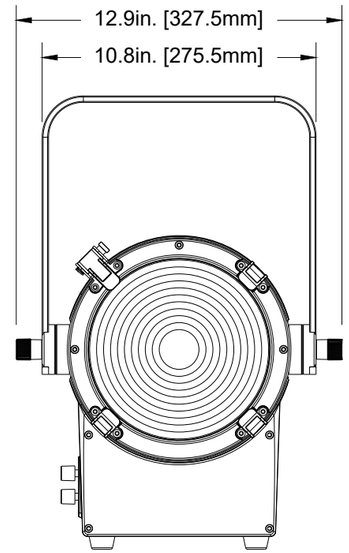

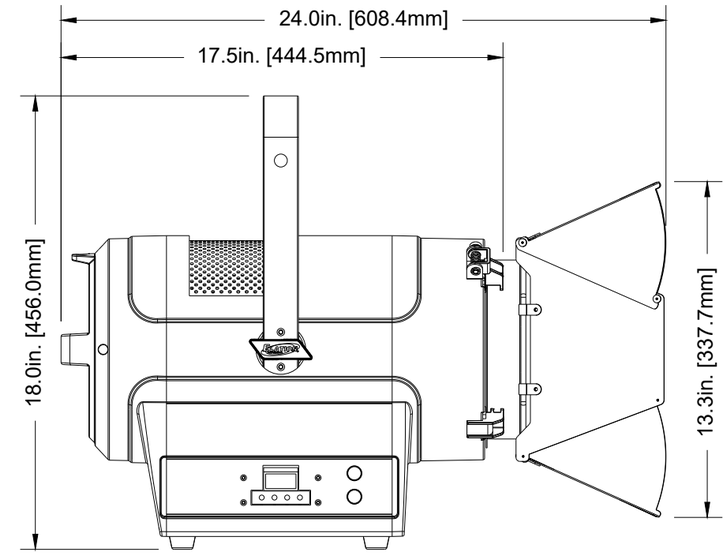

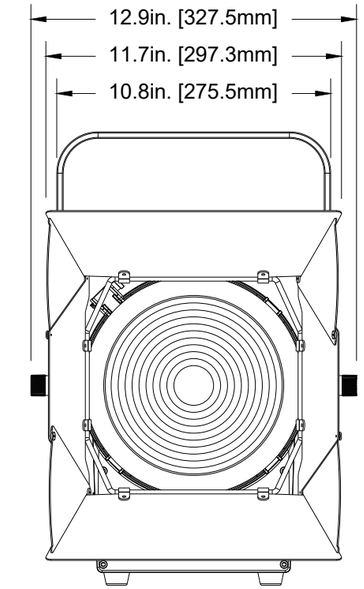

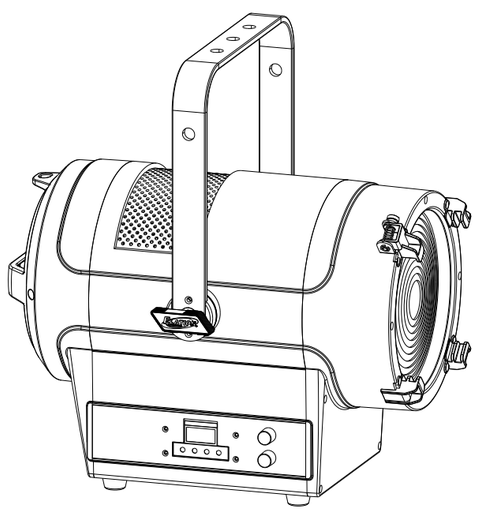

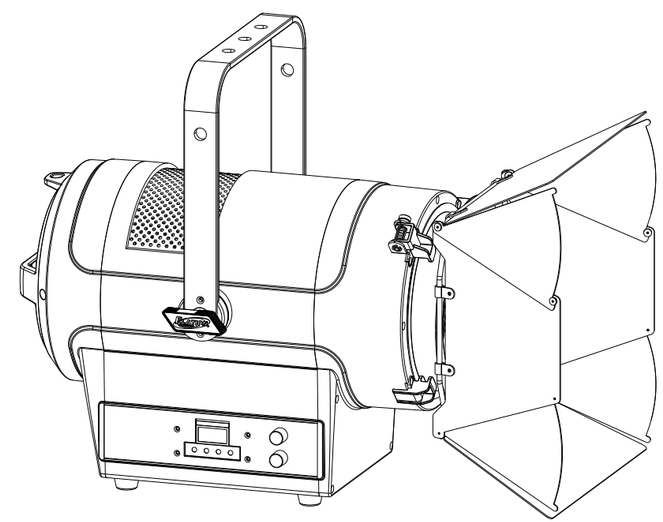

TITLE:				DATE:
ELATION KL FRESNEL 8 CW				201001
SCALE:	TOL:	.XX(.X)	.XXX(.XX)	ANGLE:
NONE	±	-	-	-